Current part is item (5) on diagram. Available at www.oshkoshequipment.com

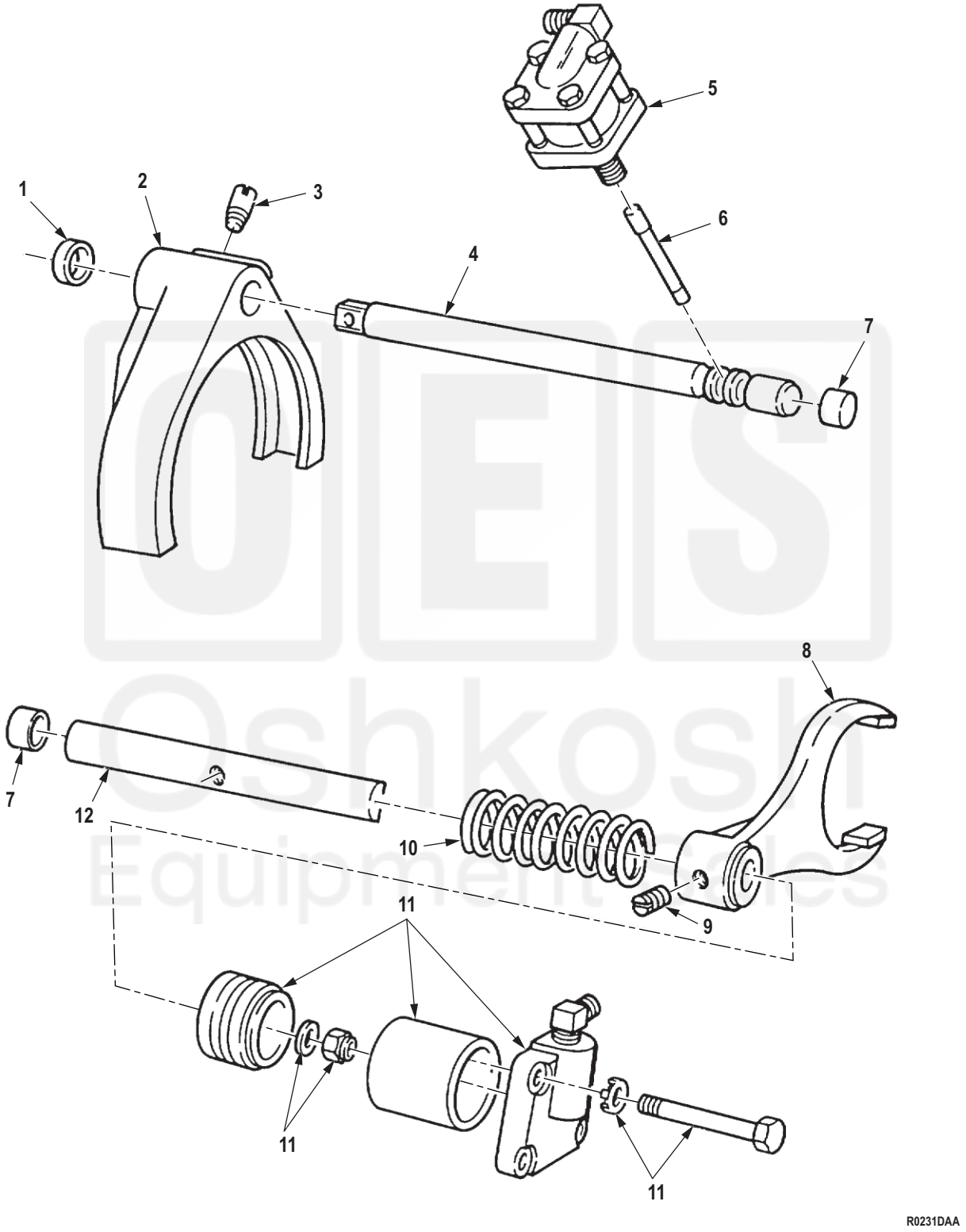

Figure 216. Transfer Shift Mechanisms.

Current part is item (5) on diagram. Available at www.oshkoshequipment.com

Current part is item (5) on diagram. Available at www.oshkoshequipment.com

(1) ITEM NO.	(2) SMR CODE	(3) NSN	(4) CAGEC	(5) PART NUMBER	(6) DESCRIPTION AND USABLE ON CODE (UOC)	(7) QTY
					GROUP 0803 GEARSHIFT, VACUUM BOOSTER AND CONTROLS.	
					FIG. 216. TRANSFER SHIFT MECHANISMS.	
1	PAHZZ	5330-01-132-8346	3D6E9	A-1205-P-1758	SEAL,PLAIN ENCASED UOC: DAC,DAD,DAE,DAF,DAG,DAH,DAJ,DAL,DAW,DAX,V14,V15,V16,V17,V18,V19,V20,V21,V22,V24,ZAA,ZAB,ZAC,ZAD,ZAE,ZAF,ZAG,ZAH,ZAJ,ZAL	1
2	PAHZZ	2520-01-136-8717	78500	3296C-107	SHIFTER FORK,VEHICU UOC: DAC,DAD,DAE,DAF,DAG,DAH,DAJ,DAL,DAW,DAX,V14,V15,V16,V17,V18,V19,V20,V21,V22,V24,ZAA,ZAB,ZAC,ZAD,ZAE,ZAF,ZAG,ZAH,ZAJ,ZAL	1
3	PAHZZ	5305-01-142-2793	3D6E9	26X-235	SETSCREW UOC: DAC,DAD,DAE,DAF,DAG,DAH,DAJ,DAL,DAW,DAX,V14,V15,V16,V17,V18,V19,V20,V21,V22,V24,ZAA,ZAB,ZAC,ZAD,ZAE,ZAF,ZAG,ZAH,ZAJ,ZAL	1
4	PAHZZ	3040-01-134-1318	78500	2244-Z-26	SHAFT,STRAIGHT UOC: DAC,DAD,DAE,DAF,DAG,DAH,DAJ,DAL,DAW,DAX,V14,V15,V16,V17,V18,V19,V20,V21,V22,V24,ZAA,ZAB,ZAC,ZAD,ZAE,ZAF,ZAG,ZAH,ZAJ,ZAL	1
5	PAHZZ	2520-01-134-0899	3D6E9	A1-3261-D-290	INTERLOCK CYLINDER, UOC: DAC,DAD,DAE,DAF,DAG,DAH,DAJ,DAL,DAW,DAX,V14,V15,V16,V17,V18,V19,V20,V21,V22,V24,ZAA,ZAB,ZAC,ZAD,ZAE,ZAF,ZAG,ZAH,ZAJ,ZAL	1
6	PAHZZ	2520-01-134-7657	78500	2244-D-30	LOCK,PUSHROD UOC: DAC,DAD,DAE,DAF,DAG,DAH,DAJ,DAL,DAW,DAX,V14,V15,V16,V17,V18,V19,V20,V21,V22,V24,ZAA,ZAB,ZAC,ZAD,ZAE,ZAF,ZAG,ZAH,ZAJ,ZAL	1
7	PAHZZ	5340-00-752-1372	19207	7521372	PLUG,EXPANSION UOC: DAC,DAD,DAE,DAF,DAG,DAH,DAJ,DAL,DAW,DAX,V14,V15,V16,V17,V18,V19,V20,V21,V22,V24,ZAA,ZAB,ZAC,ZAD,ZAE,ZAF,ZAG,ZAH,ZAJ,ZAL	2

Current part is item (5) on diagram. Available at www.oshkoshequipment.com